BinGO!

Plus / Professional

Getting Started

Version 1.3
Document #71020C

July 1999

Copyright © 1999 BinTec Communications AG
All rights reserved

Purpose

This manual provides a short description of the installation and first-time configuration of the BinGO! Plus and Professinonal routers with Software Release 4.9.4. Before installing and configuring your router, please note the security instructions described in your BinGO! Plus and Professinonal User´s Guide.

It is highly recommended that you read our Release Note containing the latest information and instructions for the most current Software Release – especially if you are performing a software update to a higher level. The latest Release Note is always available at www.bintec.de.

Liability

While every effort has been made to ensure the accuracy of all information in this manual, BinTec Communications AG assumes no liability to any party for any loss or damage caused by errors or omissions or by statements of any kind in this document. BinTec Communications AG is only liable within the scope of its terms of sales and delivery.

The information in this manual is subject to change without notice. Additional information, including changes and Release Notes for BinGO! Plus and Professinonal, can be retrieved at www.bintec.de.

As an ISDN multiprotocol router, BinGO! Plus and Professinonal establishe ISDN connections in accordance with the system´s configuration. To prevent unintentional charges accumulating, the product should be carefully monitored. BinTec Communications AG accepts no liability for incidental or consequential loss of data, unintentional connection costs and damages resulting from the unsupervised operation of the product.

Trademark

BinTec and the BinTec logo are registered trademarks of BinTec Communications AG.

All other product names and trademarks are the property of their respective companies.

Copyright

All rights are reserved. No part of this publication may be reproduced or transmitted in any form or by any means – graphic, electronic, or mechanical – including photocopying, recording in any medium, taping, or storage in information retrieval systems, without the prior written permission of

the copyright owner. Also, an adaptation, especially a translation, of the document is inadmissable without the prior consent of BinTec Communications AG.

How to contact BinTec Communications

Ways to contact BinTec	Telephone number or address
Telephone	+49 911 96 73 0
FAX	+49 911 688 07 25
Mail	BinTec Communications AG Südwestpark 94 D-90449 Nürnberg GERMANY
WWW	http://WWW.BinTec.DE

BINGO! PLUS/PROFESSIONAL
GETTING STARTED

Features 2

Software Installation 5

Installing the BinGO! 6
- LED Indicators. 7

PABX Functions 9

Configuration 10
- Gathering the Information 12
- Accessing the BinGO! 13
- Over Serial Port. 14
  - With a terminal or terminal program (UNIX or PC) 14
- Over Ethernet. 14
  - From a Windows PC using DIME Tools 14
  - From any computer using telnet 15
- Over ISDN 15
  - From a computer connected to another BRICK 15
- Additional Configuration Possibilities. 15
  - SNMP shell 15
  - Third party SNMP Manager 16

Configuration Wizard 16
Configuration with Setup Tool 16
Licenses 17
System 18
PABX Configuration 18
Remote CAPI and Remote TAPI 20
Remote CAPI Server TCP Port 20
Remote TAPI Server Port 21
Setting up the LAN Interface 21
Setting up the ISDN Interface 22
WAN Partner 23
WAN Numbers 24
PPP Settings 24
IP Partner Configuration 25
IP Configuration 25
Saving your Configuration. 26
Testing your Configuration 27
Troubleshooting 27
Getting the latest BRICK News and Software . .28

BinGO! Plus/Professional
Getting Started

Welcome!
This manual has been designed to help you quickly install and configure your new router using Setup Tool.

For first-time confiurations, the quickest and easiest way to configure your new BinGO! Plus or Professional is to use the *Configuration Wizard* included on the Companion CD. The Wizard is a Windows based tool that supports configuring basic functions via the serial port. Please refer to the *Quick Install Guide* for detailed step-by-step instructions.

First, we'll provide a short list of the available features on the BinGO!, then we'll cover installing the additional software included with your BinGO!.

Physically *Installing the* BinGO! begins on page 6.

Configuring the BinGO! is divided into 3 steps and is described beginning on page 10.

Finally, we'll describe a few simple tests that you can use to verify that your configuration was successful (p. 27).

Features

BinGO! is BinTec's Plug-and-Play Personal ISDN internet router. This powerful multi-protocol router enables you to interconnect small LANs via ISDN.

You can use BinGO! to connect either a single PC or a whole LAN to the ISDN. BinGO! is shipped with a license for up to *eight LAN users*. You can purchase an upgrade license for an unlimited number of LAN users.

Even with it's eight LAN user-license, the BinGO! is a cost-effective Intranet solution for connecting small LANs via the ISDN.

BinGO! is a member of the successful BIANCA/BRICK family of ISDN routers.[1]

BinGO! can also be used as a Private Branch Exchange (PABX) for two POTS[2] devices (e.g. analog telephones, fax machines, modems, etc.). At the same time it manages the data connections between your workplace and the company LAN. It satisfies all the requirements of today's LAN - WAN connections by combining the functions of a Gateway, Router, Bridge, X.25 Switch and Telematic Server in a single, compact product.

The most important features of BinGO! include:

- Two analog ports for connecting POTS devices, such as telephones, fax machines, or modems.

1. Any section in this document—or in other parts of your BinGO! user documentation—which refers to a »BRICK« in general is also valid for your BinGO!.
2. »Plain old telephone service«

- Free-of-charge internal calls between two connected analog telephones.
- Priority Voice Technology—incoming voice calls take precedence over existing two-B-channel data connections, i.e. the data connection gives up one of its B-channels for the incoming telephone call.
- Support for TCP/IP routing, X.25 packet transfer, IPX routing, and bridging.
- Remote CAPI services for many communications applications under Windows 3.x, Windows 95, and Windows NT.
- Remote TAPI services for many Windows 95 and Windows NT telephony applications.
- Configuration via serial connection (V.24), telnet (TCP/IP), isdnlogin (ISDN), separate SNMP managers, or special Windows software (DIME Browser).
- STAC compression on both B channels.
- Integrated Firewall, using NAT (Network Address Translation) and Access Lists.
- Accounting of ISDN and TCP/IP connections.
- LAN interface with 10Base-T(RJ45) port.
- LAN switch (|| LAN oder ⤫ PC (crossover mode)) frees you from having to use a special crossover cable for connecting BinGO! to your PC. The LAN switch is located on the underside of your BinGO!.
- Standard ISDN S_0 interface with automatic detection/configuration of protocol settings.
- Windows and UNIX software for configuring and administering the BinGO!.
- HTTP and Java Status Monitors.

BinGO! offers you all the features of the BinGO! Plus. In addition, the BinGO! Professional has a built-in fax modem as well as local fax-storage which can be used to

store/forward faxes when your PC is turned off. For instructions on configuring the modem or the local fax storage, please refer to your User's Guide.

Software Installation

Your BinGO! includes several helper/utility programs for Windows and UNIX.

BRICKware for Windows

BRICKware for Windows consists of the following programs (for detailed information, please refer to the online *BRICKware for Windows* documentation):

- *Configuration Wizard* – A tool for performing a first-time configuration of your BinGO!.
- *DIME Tools* – A set of tools for administering your BRICK which includes: *BootP Server*, *TFTP Manager*, *Syslog Server*, *Time Server*, and *ISDN and CAPI Trace Utility*.
- *DIME Browser* – An SNMP manager with a graphical user interface for administering your BinGO!.
- *BRICK at COM1/2* – Preconfigured Windows terminal sessions for accessing your BinGO! over your computer's serial ports.
- *Remote CAPI* clients for CAPI 1.1 and 2.0.
- *Remote TAPI* service provider for TAPI 1.4 and 2.0.

If you intend on configuring your BinGO! from a PC or using it as a CAPI or TAPI server for PC applications you should install the software as explained in the online document *BRICKware for Windows*.

RVS-COM

RVS-COM for Windows 95 and Windows NT (Lite Version) is an application that runs using the CAPI interface and provides telecommunications services, such as T-Online (formerly Btx or Datex-J), Fax, Voice Mail, and Eurofiletransfer. Complete instructions can be found in the online documentation included on the CD.

BRICKtools for UNIX

BRICKtools for UNIX includes a Eurofiletransfer server and client as well as ISDN and CAPI trace tools for various UNIX platforms (refer to the *Software Reference*).

Installing the BinGO!

Select a flat, stable location for your BinGO! and connect the included cables to the ports located on the back plane as shown in the diagram below.

Incorrect cabling of the LAN and ISDN interfaces could damage your router. Don´t interchange the LAN and ISDN interfaces. Only connect the LAN interface of your router with the LAN interface of your PC/hub. Only connect the ISDN interface of your router with your ISDN outlet.

Using an incorrect power supply may damage your router. Only use the included 16VAC power supply when supplying power to your BinGO!. BinTec Communications AG cannot assume responsibility for any damage resulting from the use of other power supplies.
Please note that the BinGO! power supply has an output of 16V~/1A while the BinGO! power supply has an out-

put of 5V–/800mA. These two supplies are not interchangeable.

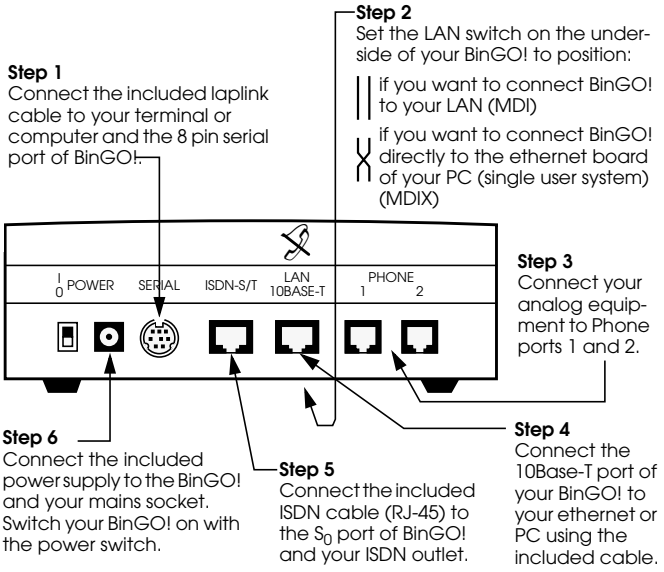

The two RJ-45 cables included with your BinGO! are identical, and can both be used for connecting BinGO! to the ISDN as well as the ethernet.

LED Indicators

Each time you power up the system, the BinGO! switches into **Power Up Mode** and performs a self-test to verify the integrity of the system. The LEDs on the front panel correspond to various stages of the test.

Upon successful completion of the self test, the BinGO! then switches into **BOOTmonitor Mode**, (the right three LEDs remain on) as described in the *User's Guide.*

If the ERR indicator remains on (see table below) there may be a problem with the cabling. Verify the ISDN and LAN cabling is correct and power up the system again.

Also note that the once the rooter is up, the system may be accessed via the ISDN using the factory-set passwords. Changing the default passwords is described on page 18.

Also make sure the LAN switch on the underside of your BinGO! is set to the correct position (see page 6).

After 4 seconds, the system then switches into **Normal Operation Mode**. During normal operation, the front panel indicators display status information as follows.

LED	State	Meaning
MSG	On	BinGO! Professional only. A facsimile is stored in the fax storage.
LAN	On	LAN activity: Packet being sent via Ethernet.
L1, L2	On	Data transmission on B-Channel 1 (L1) or B-Channel 2 (L2).
ERR	On (constant)	Error: The LAN cabling is not connected.or the LAN switch is in the wrong position.

PABX Functions

You can connect two POTS[1] devices (e.g. analog telephones, fax machines, modems, etc.) to Phone ports 1 and 2 of BinGO!.

Please note, however, that these devices must be configured to use tone dialling, and not pulse selection.

If you just connect BinGO! to the ISDN and two analog telephones to ports 1 and 2 you can use the following functions without any further configuration.

- Free-of-charge internal calls between the two connected devices—each device can be reached by dialling »#« on the other device.
- Both phones ring when an external phone call comes in.
- You can call any external number by simply dialling it. If your BinGO! is connected to the ISDN through an external PBX, you may have to dial a prefix code, often “0”, to access an external line.

Some PBXs and exchanges may, however, refuse to forward calls without an ISDN calling party number. In these cases you will have to configure your BinGO! as described in the following sections before you can make external calls.

1. »Plain old telephone service«

Configuration

Configuring your new BinGO! involves three simple steps which are described in the following sections.

Gathering the Information (p. 12)

1. First, you will need to know several pieces of information about your network setup. At a minimum you will need to know the information listed in the table shown on the following page. Fill in the fields now and refer to them later when needed.

Accessing the BinGO! (p.13)

2. Next, you need to decide whether you want to configure your BinGO! over its Ethernet, ISDN, or serial port. The section *Accessing the* BinGO! describes the possible ways of gaining access to your new BinGO!.
   No matter which method you select, you will arrive at an SNMP shell login prompt and can continue with the configuration using the Setup Tool.

Configuration with Setup Tool (p.16)

3. The last step involves logging into the BinGO! as **admin**, using the **bintec** password, and issuing **setup** at the shell prompt. Using the Setup Tool is the easiest way to get your BinGO! up and running. After logging into the BinGO!, use the information you gathered for your local setup, and proceed to the section *Configuration with Setup Tool*.

Caution

As an ISDN multiprotocol router, BinGO! establishes ISDN connections in accordance with the system´s configuration. Incorrect or incomplete configuration of your product may cause unwanted charges. The conditions that lead to establishing connections are largely dependent on the respective network configuration.

- To avoid unintentional charges, it is essential that you carefully monitor the product. Observe the LEDs of your product or use the monitoring function in the Setup Tool.
- Use filters to deny certain data packets (cf. page 72). You should be aware that especially in a Windows network broadcasts may establish connections.
- Use the Credits Based Accounting System, as described on page 116, to define a maximum number of ISDN connections and the accounted charges allowed in a certain period of time and thus limit unwanted charges in advance.
- Use the checklist “ISDN connections remain open or are unwanted” on page 190 to prevent the most common causes of unintentional charges.

Gathering the Information

In the following example network setup, the host ***merlin*** will be acting as the nameserver and timeserver for ***brick***, the BinGO! we will be configuring with Setup Tool. The router ***partnerbrick*** will serve as the remote router for connecting the Company LAN over ISDN.

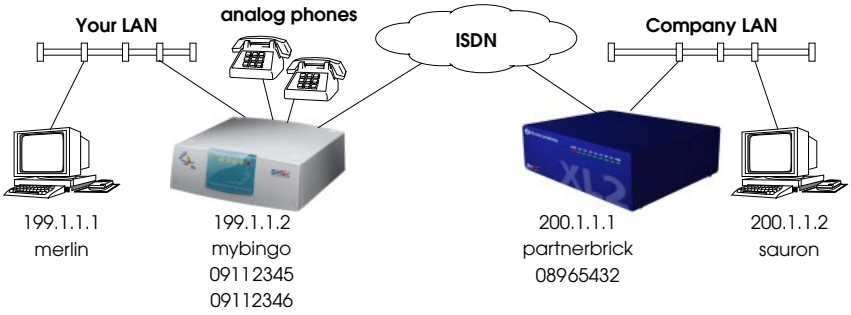

Fill in the table below with the configuration parameters for your local setup, then proceed to the next section.

Parameters	See page	Our example	Your BRICK
License Information	17	–	(see license card)
IP Address	14/21	199.1.1.2	
Hostname	14/21	mybingo	
ISDN telephone # of your BinGO!	18	09112345 09112346	
Remote router's IP Address	25	200.1.1.1	
Remote router's Hostname	23	partnerbrick	
Remote router's ISDN telephone #	23	08965432	
Remote partner's PPP password	23	secret	

Accessing the BinGO!

The BinGO! can be configured over any of its interfaces using a variety of methods.

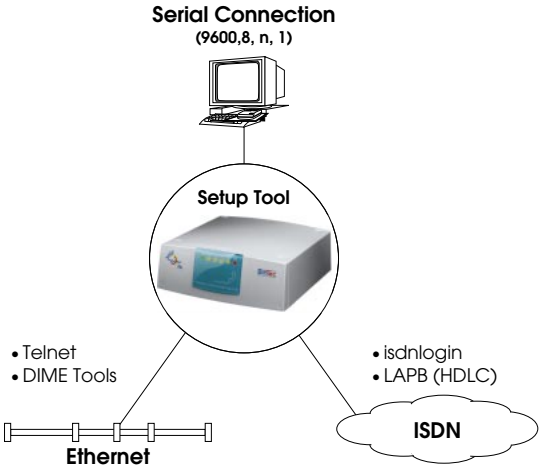

Access Methods

As shown above, there are several ways of accessing your BinGO! once connected to the network interfaces.

- Over a Serial Connection (p. 14)
  - From a computer or terminal.
- Over Ethernet (p. 14)
  - From a Windows PC using *DIME Tools.*
  - From any computer on the LAN using telnet.
- Over ISDN (p. 15)
  - From a computer connected to another BRICK or BinGO!
  - Other ISDN stations capable of LAPB (HDLC).

Setup Tool

The simplest method involves using the **Setup Tool** over a Serial Connection. This method requires a terminal or a computer running a terminal program to be attached directly to the BinGO!'s serial port.

Over Serial Port

With a terminal or terminal program (UNIX or PC)

- Connect the computer or terminal using the included cable to the BRICK's serial port.
- Set your communications parameters to: 9600 bps, 8 data bits, no parity, 1 stop bit, software handshake (XON, XOFF) and VT100 terminal emulation.
- After pressing the <Return> key, you should receive a login prompt.

For Windows PCs: You can also use the preconfigured terminal programs *BRICK at COM1/COM2* included in the *BRICKware* suite.

- Continue with the *Configuration with Setup Tool* as described on page 16.

Over Ethernet

From a Windows PC using DIME Tools

You can access the BinGO! from a Windows PC on the LAN. This requires *BRICKware* and a TCP/IP stack to be installed on a PC on the same segment as the BRICK. Power up your BinGO!; then with *DIME Tools* running:

- A *BootP Server* window will open automatically once the PC receives a BOOTP request from the BRICK.
- In this window, enter the BRICK's IP address, netmask, and hostname. The nameserver and timeserver's address can also be set here.
- Using a VT100 compatible telnet program, telnet to your BRICK using the IP address you assigned it with *BootP Server*.
- Continue with the *Configuration with Setup Tool* as described on page 16.

From any computer using telnet

Once the BRICK is assigned it's IP address (i.e. using *BRICKware* and *BootP Server* as mentioned above) you can access the system from any computer on the LAN.

- Using a VT100 compatible telnet program, telnet to the BRICK at it's IP address.
- Continue with the *Configuration with Setup Tool* as described on page 16.

Over ISDN

From a computer connected to another BRICK

The BRICK automatically configures its ISDN interface at boot time if the system is attached to an ISDN dialup line. You can login to your new BRICK from this computer over ISDN using the *isdnlogin* program.

- Login to your existing BRICK.
- At the shell prompt, issue **isdnlogin** <*telno*> where *telno* is the ISDN number your new BRICK is connected to.
- Continue with the *Configuration with Setup Tool* as described on page 16.

Additional Configuration Possibilities

SNMP shell

Of course, the BRICK can be configured manually from the SNMP shell or by using an external SNMP manager such as *DIME Browser for Windows*. These mechanisms require a greater understanding of the BinGO!'s internal data structures, SNMP, and the MIB (management information base).

For information on working with the SNMP shell or using DIME Browser, refer to the *Software Reference* and *BRICKware for Windows* respectively (both are included on the Companion CD).

Third party SNMP Manager

The BRICK can also be configured using third party SNMP Managers such as HP OpenView, Sun/Netmanager, and Transview. The Management Information Base implemented on the BRICK must be imported into your SNMP manager. The complete MIB is included on the Companion CD. See your SNMP manager documentation on importing MIBs.

Configuration Wizard

As mentioned at the beginning of this document, the BinTec Configuration Wizard is also available for performing a first-time configuration from a Windows PC via a serial connection. The Wizard supports configuring basic settings on your BinGO!. Plus/Professional router

Configuration with Setup Tool

If you haven't already done so, login to the BRICK now by entering **admin** at the login prompt and **bintec** at the password prompt. Enter **setup** now. Setup Tool's main menu will be displayed as follows.

```
BinGO! Plus/Pro Setup Tool                          BinTec Communications AG
                                                                  mybingo

Licenses                          System

LAN Interface:        CM-BNC/TP, Ethernet

WAN Interface:        CM-1BRI, ISDN S0

Feature Module:       CM-POTS,    Phone 1
                      CM-POTS,    Phone 2
WAN Partner
IP    PPP          PABX          MODEM[a]

Configuration Management
Monitoring and Debugging
Exit

Press <Ctrl-n>, <Ctrl-p> to scroll through menu items, <Return> to enter
```

a. BinGO! Professional only

Navigating the Menus

The Setup Tool menus can be navigated using the following keys:

Return	Enters the currently highlighted menu item.
↑ Tab ↓	Moves forward and backward between menus and fields.
← →	Scrolls among entries in a list of possible field values.
Spacebar	Selects/unselects (toggles) special fields or scrolls a list of field entries.
Esc Esc	Entering two successive Esc characters returns you to the previous menu.

As you move between menus, the lines at the top and bottom of your screen will display status information for the respective menu/field you are currently editing.

Licenses

Select the [*Licenses*] menu and then [*ADD*] to enter your license information. You will need to enter your *Serial Number*, *Mask* and *Key*, as shown on your License card.

After entering your information and selecting [*SAVE*], the system will display a list of licensed features.

If the system states that the license is “not ok” then you have entered an invalid Serial Number, Mask, and Key combination. Delete the invalid entry (marking the entry for deletion with the spacebar, then selecting delete) and enter your information again.

You can use the ‹Tab› key to move directly from one field to the next. Useful for moving from a field containing a long list of entries directly to the next field.

Once you have entered your license information, select [*EXIT*] to return to the main menu.

System

Select [*System*] from the main menu. The only required entries at this time are the first two fields (*System Name* and *Local PPP ID*); this information will be used as the BRICK's hostname and PPP ID. With the exception of the *admin*, *read*, and *write Password/Community* fields, the other fields are not required and can be edited later. The SNMP Community fields define the passwords that are required for logging into your BinGO! via the network.

You can, of course, enter the same name in both fields. In our example both *System Name* and *Local PPP ID* are set to bingo (see page 12).

Select [*SAVE*] to accept the entries and return to the main menu.

PABX Configuration

You will only need the CM-POTS, Phone 1 and Phone 2 menus from the Setup Tool main page to configure extension numbers for the POTS ports.
In the [*PABX*] menu you will find all the settings necessary for configuring the POTS ports and the Remote TAPI.

If you have not connected any analog devices to your BinGO!, please read on in section *Setting up the LAN Interface* on page 21.

Initially your BinGO! is factory-configured to route incoming phone calls to both POTS ports, i.e. if you connected telephones to both ports, they both will ring. Incoming data calls will be routed to the *isdnlogin* service (see User's Guide). You can call one connected phone from the other by dialling #. For calls to external simply dial the number you want to reach.[1]

Enter either the [*CM-POTS, Phone 1*] or the [*CM-POTS, Phone 2*] menu, depending on which port you wish to configure. Both these menus feature the same set of fields and possible entries .

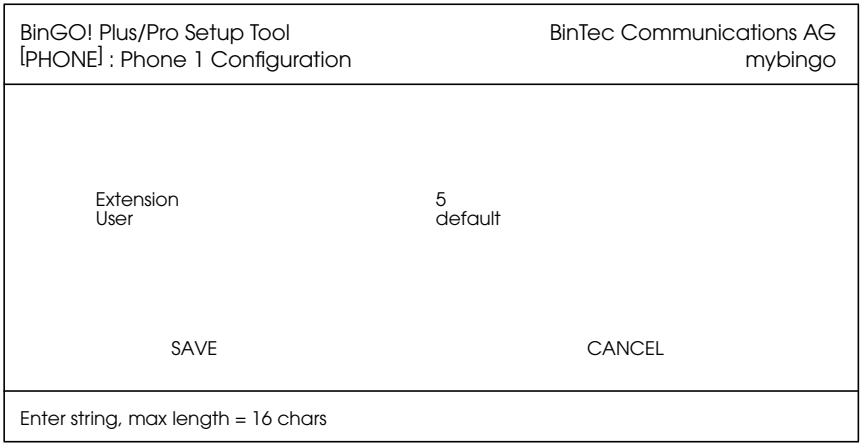

Enter the *Extension* for this phone.[1] For example:

Point-to-Multipoint

Let's assume you have a Euro ISDN point-to-multipoint access with the following three MSNs 2345, 2346, and 2347. You can then e.g. set the extension for phone 1 to 5 and the extension for phone 2 to 6. The phones can then be reached as follows:

	Phone 1	**Phone 2**
Extension	5	6
internal number	#5	#6
external number	2345	2346

1. If your is BinGO! connected to the ISDN through an external PBX, you may have to dial a prefix code for external calls.
1. If your BinGO! is connected to a point-to-point ISDN access the extension can be any number you like, if you have a point-to-multipoint configuration you will have to enter the final digit(s) of one of your MSNs (multiple subscriber numbers).

Point-to-Point

If you had a Euro ISDN point-to-point access with the number 1234 you could choose any extension for the phones, e.g. phone 1 could get extension 25, and phone 2 could get extension 333. The phones can then be reached as follows:

	Phone 1	Phone 2
Extension	25	333
internal number	#25	#333
external number	123425	1234333

For the moment you can leave the *User* field unchanged.

Select [*ADD*] to add a new number. Then enter the desired number in the *External Number* field (usually the last few digits of the number are sufficient) and leave the *Direction* field at *both*—this means that the number will be used for both incoming and outgoing calls. Confirm your entries by selecting [*SAVE*].

If you add further external numbers, the *Direction* field will be set to *incoming*, because only one *outgoing* or *both* entry is useful for each port.

Remote CAPI and Remote TAPI

After entering the licensing information (see page 17) you normally do not need to configure your BinGO! for using Remote CAPI or Remote TAPI.

There ist, however, the possibility to disable Remote CAPI or TAPI activities from within the Setup Tool.

Remote CAPI Server TCP Port

To disable Remote CAPI go to the [*IP*] [*Static Settings*] menu and set the *Remote CAPI Server TCP Port* to 0 (the default value is 2662).

Remote TAPI Server Port

To disable Remote CAPI go to the [*PABX*] [*Static Settings*] menu and set the *Remote TAPI Server Port* to 0 (the default value is 2663).

Setting up the LAN Interface

Select [*CM-, Ethernet*] to configure your ethernet interface. In the following menu you will need to enter the IP address, local netmask[1], and type of encapsulation to use on your BRICK. For now, you can select Ethernet II encapsulation.

The settings for our example setup on page 12 are shown below.

```
BinGO! Plus/Pro Setup Tool                          BinTec Communications AG
(LAN): Configure Ethernet Interface                                  mybingo

        IP-Configuration
            local IP-Number          199.1.1.2
            local Netmask            255.255.255.0
            Encapsulation            Ethernet II

        IPX-Configuration
            local IPX-NetNumber      0
            Encapsulation            none

        Bridging                     enabled

        Advanced Settings >

                SAVE                                CANCEL

Enter IP address (a.b.c.d or resolvable hostname)
```

Once your entries are correct, select [*SAVE*].

1. If you are using a standard netmask (e.g. 255.255.255.0), you can leave this field empty.

Setting up the ISDN Interface

Select [*CM-1BRI, ISDN S0*] to configure your ISDN interface.
Depending on which protocol your ISDN subscriber interface uses and whether or not the ISDN autoconfiguration was successful, the [*CM-1BRI, ISDN S0*] menu may be displayed as follows:

```
BinGO! Plus/Pro Setup Tool                    BinTec Communications AG
(WAN): WAN Interface                                          mybingo


Result of autoconfiguration:      Euro ISDN, point to multipoint

ISDN Switch Type                  autodetect on bootup

Country Code                      49
Area Code                         911
Subscriber Number                 1234

Advanced Settings >

                SAVE                              CANCEL

Use <Space> to select
```

The ISDN autoconfiguration procedure runs until either the proper protocol is detected or the switch type is set manually. If the cables are connected and auto detection just keeps running, you may have to select the appropriate ISDN protocol manually by scrolling through the entries in the *ISDN Switch Type* field using the spacebar or the left and right arrow keys.

Leaving the Switch Type setting to “autodetect on bootup” usually allows the BinGO! to automatically detect the proper ISDN protocol each time the system boots.

To ensure data transfers are possible over ISDN, verify that the autoconfiguration is correct or set your ISDN switch type appropriately.

If your BinGO! is connected to a point-to-point interface you can leave the *Country Code*, *Area Code*, and *Subscriber Number* fields empty. On point-to-multipoint interfaces you must enter your local values. In the example above, the number 1234 for a point-to-multipoint interface in Nürnberg is shown.

WAN Partner

Select [*WAN Partner*]. This menu displays a list of known WAN partners and initially will be empty.

To add a new WAN partner select [*ADD*]. A menu similar to the following will be displayed. For our example setup, we have already filled in the appropriate fields.

```
BinGO! Plus/Pro Setup Tool                    BinTec Communications AG
(WAN)(ADD): Configure WAN Partner                              mybingo

Partner Name                    partnerbrick

Encapsulation                   PPP
Compression                     none
Encryption                      none
Calling Line Identification     no


WAN Numbers >
PPP >
Advanced Settings >

IP >
IPX >
Bridge >

                        SAVE                    CANCEL

Enter string, max length = 25 chars
```

In the *Partner Name* field, enter a name for this partner; normally the partner's hostname is used. You can specify the encapsulation to use, and whether or not to compress/encrypt data. Calling Line ID, (CLID) is enabled automatically once you configure am ISDN number (in the next step).

WAN Numbers

After adding the WAN partner information, select the [*WAN Numbers* >] submenu. This menu lists the WAN numbers this partner can be reached at and initially will be empty. Select [*ADD*] to enter a new WAN number for the partner you just configured.

In the *ISDN number* field, enter the ISDN telephone number your partner's router can be reached at. To take advantage of ISDN's CLID feature, select "both (CLID)" in the *Direction* field.

Select [*SAVE*], and then [*EXIT*] to return to the partner settings menu.

PPP Settings

Now go into the [*PPP* >] submenu and configure the PPP settings to use for this link. Here we define the type of authentication to use for call setup. In our example we are routing IP traffic, and will use both PAP and CHAP authentication. Then enter the *PPP Password* the remote site must match when performing authentication.

```
BinGO! Plus/Pro Setup Tool                          BinTec Communications AG
(WAN)(ADD)(PPP): Configure WAN Partner                                mybingo

Authentication                  CHAP + PAP
Partner PPP ID                  partnerbrick
Local PPP ID                    mybingo
PPP Password                    secret

Keepalives                      off
Link Quality Monitoring         off

                    OK                    CANCEL

Enter string, max length = 25 chars
```

Select [OK] to return to the main [WAN Partner] menu.

IP Partner Configuration

Select the [*IP* >] submenu and configure the IP parameters for this WAN partner. Depending on whether you are using a transfer network, enter the IP Network address and netmask[1] for your WAN Partner.

```
BinGO! Plus/Pro Setup Tool                    BinTec Communications AG
(WAN)(ADD)(IP): IP Configuration (partnerbrick)              mybingo

IP Transit Network                            no

Partner's LAN IP Address                      200.1.1.0
Partner's LAN Netmask                         255.255.255.0

                SAVE                                CANCEL

Enter IP address (a.b.c.d or resolvable hostname)
```

Select [*SAVE*] twice, and then [*EXIT*] to return to Setup Tool's main menu.

IP Configuration

From the main menu select [*IP*]. From the submenus which are displayed select [*Routing*]. This menu displays a list of routes known to the BinGO!. Initially, the list will be empty. Select [*ADD*] to create a new default route. Your display will be similar to the menu shown below.

In the *Route Type* field, select "Default route".

In the *Network* field select the appropriate entry (using the spacebar) to specify whether the default route should be over the LAN or WAN. For WAN routes, select the ap-

1. If you are using a standard netmask (e.g. 255.255.255.0), you can leave this field empty.

propriate entry depending on whether you are using a transfer network.

In the *Partner / Interface* field select the partner name the default route leads to. For our example, we added a default route without a transfer network to partnerbrick via ISDN.

```
BinGO! Plus/Pro Setup Tool                    BinTec Communications AG
(IP)(ROUTING)(ADD): Confuigure IP Routes                      mybingo


Route Type                    Default route
Network                       WAN without transit network

Partner / Interface           partnerbrick

Metric                        1


                SAVE                          CANCEL

Use <Space> to select
```

Then select [*SAVE*] and then [*EXIT*] until you return to the main menu.

Saving your Configuration

Once you have finished configuring your ISDN dialup line, select [*Exit*] from the main menu.

For an initial configuration you should select [*Save as boot configuration and exit*]. Your initial configuration is now complete and is saved in a flash ROM file named "boot". You are then returned to the BinGO!'s SNMP shell prompt.

The configuration file saved as "boot" will be used upon each new system start.

For information on configuration management and the transfer of configuration files to/from remote hosts via TFTP refer to the BinGO! *User's Guide.*

Testing your Configuration

LAN Test

To test your new configuration try issuing a simple ping command to a PC on the BinGO!'s LAN to verify the LAN interface is properly configured. In our example, we would issue:

ping -c 5 199.1.1.1

If the LAN portion of the configuration was successful you should receive output similar to the following:

```
PING 199.1.1.1: 64 date bytes
64 bytes from 199.1.1.1: icmp_seq=0. time=8. ms
64 bytes from 199.1.1.1: icmp_seq=1. time=1. ms
64 bytes from 199.1.1.1: icmp_seq=2. time=1. ms
64 bytes from 199.1.1.1: icmp_seq=3. time=1. ms
64 bytes from 199.1.1.1: icmp_seq=4. time=1. ms
----199.1.1.1 PING Statistics----
5 packets transmitted, 5 packets received, 0% packet loss
round-trip (ms) min/avg/max = 1/2/8
```

ISDN Test

To verify the ISDN portion of the configuration is correct, try the same command using the IP address of the remote router (200.1.1.1 in our example) or a host on the remote LAN.

If the ping command to the remote router is successful, try issuing another ping command using the IP address of a computer on the remote partner's LAN.

Once all ping commands are successful, your configuration is complete.

Troubleshooting

If any of the ping commands are unsuccessful, first make sure that the LAN switch is in the correct position (see

page 6). If there still should be problems, please refer to the *Troubleshooting* chapter in the BinGO! *User's Guide.*

Getting the latest BRICK News and Software

Now that your BinGO! is up and running, you might like to visit our WWW site at

http://www.bintec.de

to keep abreast of new developments at BinTec Communications AG.

Via our WWW server BinTec provides you free of charge with the most recent versions of:

- User documentation for your BinTec software and hardware in Portable Document Format (PDF).
- System software for your BinGO!.

You will find instructions on how to update system software in the User's Guide, chapter 8, section *Upgrading System Software*.

- Release notes for upgrading the system software of your BinGO!.
- Windows software and UNIX Tools applications.